Wide–range METAPOST tutorial

Luís Nobre Gonçalves
(L. Nobre G.)

4. september 2014

Sammendrag

Sort of workshop about TEX–things, focusing on the METAPOST language.

The Church of Free Software

Pope: Richard Stallman.

WYSIWYG

WYSIWYG

What you get is what you don't see

Freedom

You choose what you get

Freedom

You choose what you get
but
you only get it at the end of a long path.

A bit of history

Donald Knuth – *The Art of Computer Programming*

- Volume1, 1969, hot metal
- Volume2, $2^{\underline{\mathrm{nd}}}$ ed., 1977, photographic
- TEX, v1, 1978, $\mathrm{v} \longrightarrow \pi$
- METAFONT, v1, 1979, $\mathrm{v} \longrightarrow e$ — affine
- AMS, 1983
- APS, AIP, OSA, AAS, Springer-Verlag
- METAPOST, 1994, John Hobby

A bit of history

Donald Knuth – *The Art of Computer Programming*

- Volume1, 1969, hot metal
- Volume2, $2^{\underline{\mathrm{nd}}}$ ed., 1977, photographic
- TEX, v1, 1978, $\mathrm{v} \longrightarrow \pi$
- METAFONT, v1, 1979, $\mathrm{v} \longrightarrow e$ — affine
- AMS, 1983
- APS, AIP, OSA, AAS, Springer-Verlag
- METAPOST, 1994, John Hobby

METAPOST is the realm of graphic parameterization.

Main features of METAPOST

- It is easy to express geometry as METAPOST code
- METAPOST outputs postscript, SVG or PNG

```
outputformat := "svg";
```

- Very good control of 2D Bézier splines
- Special 2D operators
- Many operators work the same way in 1, 2, 3 or 4D
- Linear equations
- May include LaTeX
- May be included in LaTeX

Use METAPOST because

METAPOST helps the user to experiment different diagram layouts without changing specified geometric relationships among diagram elements.

For Almost Absolute Beginners

- Availability
- Mathematically oriented
- Programmability/Scriptability
- Forced simplicity
- Consistency

Availability

- Development site
- CTAN
  - /graphics/metapost/contrib/macros

Availability

- Development site
- CTAN
  - /graphics/metapost/contrib/macros
- TEX Users Group
  - `texlive`
- Debian
  - `texlive-metapost`
  - `texlive-publishers` includes RevTeX
  - `latex-beamer`
  - `tex4ht`
- "The LATEX Companions"

Linear equations

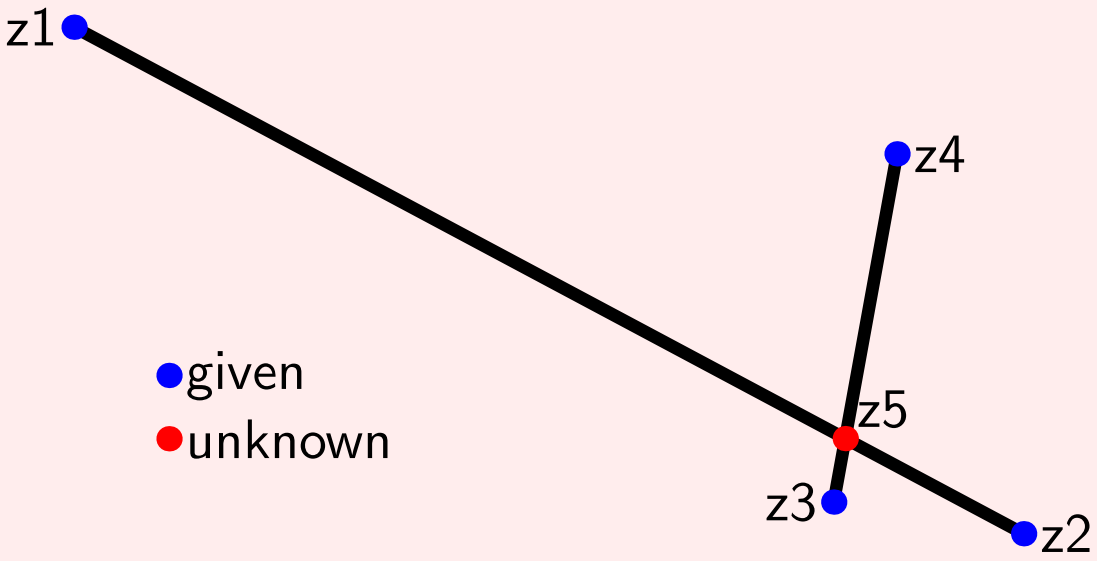

- Constraints may be expressed as linear equations

```
z5 = whatever[z1,z2];
z5 = whatever[z3,z4];
```

- No need to explicitly assign calculations to unknowns

pair doublets

- pair $(x,y) \longrightarrow$ (X,Y)
  origin (0,0)
- Coordinates

```
z[i] = (x[i],y[i]);
```

color triplets

- color (*red*,*green*,*blue*) $\longrightarrow$ (X,Y,Z)

black	(0,0,0)
red	(1,0,0)
green	(0,1,0)
blue	(0,0,1)
white	(1,1,1)

`cmykcolor` tetraplets

- `cmykcolor` (*cyan*,*magenta*,*yellow*,*black*) $\longrightarrow$ (X,Y,Z,W) (quaternions, homogeneous coordinates, 4D splines, animation frames, straight line segments, etc.)

Special operators

- Pythagorean addition and subtraction

```
h = a ++ b +-+ c;
```
$(h = \sqrt{a^2 + b^2 - c^2})$

Special operators

- Pythagorean addition and subtraction

$$h = a \;{+}{+}\; b \;{+}{-}{+}\; c; \; (h = \sqrt{a^2 + b^2 - c^2})$$

- Interval 0—1 ND operator s[,]

`0.5[(1,1),(3,5)]`	$\longrightarrow$	`(2,3)`
`-0.5[(1,1,1),(3,5,7)]`	$\longrightarrow$	`(0,-1,-2)`
`1.5[(1,1,1,1),(3,5,7,9)]`	$\longrightarrow$	`(4,7,10,13)`

Special operators

- Pythagorean addition and subtraction

  `h = a ++ b +-+ c;` $(h = \sqrt{a^2 + b^2 - c^2})$

- Interval 0—1 ND operator s[,]

`0.5[(1,1),(3,5)]`	$\longrightarrow$	`(2,3)`
`-0.5[(1,1,1),(3,5,7)]`	$\longrightarrow$	`(0,-1,-2)`
`1.5[(1,1,1,1),(3,5,7,9)]`	$\longrightarrow$	`(4,7,10,13)`

- N-dimensional scalar arithmetic

```
b = 2a;
z1 = 2*(1,2);
c2 = 2*(1,2,3); grey = 0.5white;
cc3 = 2*(1,2,3,4);
```

Other features

- Throw–in–the–garbage unknowns

  `whatever`

Other features

- Throw–in–the–garbage unknowns

  whatever

- Special functions

  dir() abs() angle() unitvector()
  sind() cosd()

Other features

- Throw–in–the–garbage unknowns

  whatever

- Special functions

  dir() abs() angle() unitvector()
  sind() cosd()

- Affine transforms (linear)
- Totally parameterized 2D cubic Bézier splines

Programmability

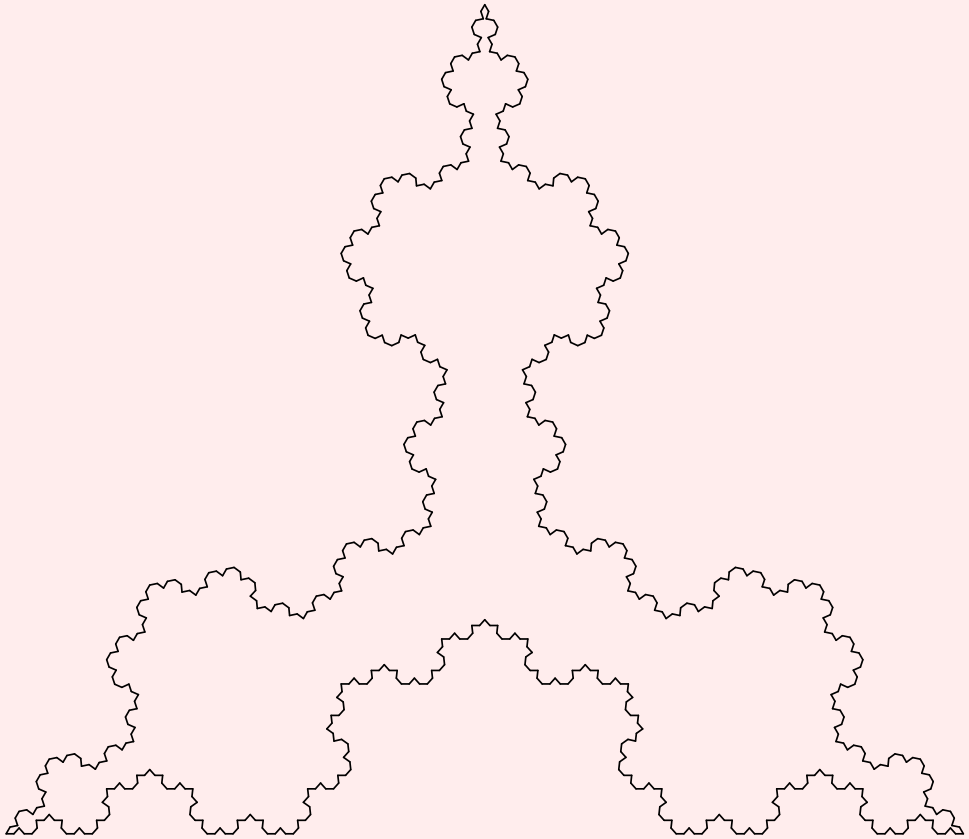

ø æ å ì § ü ç @ £ œ ß « » “ ” . . . 3.14159e-2 = $3{,}1416 \cdot 10^{-2}$

Scriptability

- `scantokens "string of commands";`
- MPlib

Forced Simplicity

- $(8\times)4096$
- $1/65536$
- 2000 points in a path
- Memory
- Number of variables

Since METAPOST version 1.803, the command line switch `--numbersystem` provides other over- and underflows

Consistency

- emacs+auctex/texmacs
- latexmp
- emp/LuaTEX
- graphicx
- beamer+xmpmulti
- GNUPLOT
- xfig
- dia/expressg
- gs+potrace+pstoedit+PstoeditMpostPreeditor
- siunitx

emacs+auctex

File Edit Options Buffers Tools Preview LaTeX Command Help

```
\documentclass{beamer}
\usepackage[norsk]{babel}
\usepackage[utf8]{inputenx}
\usepackage[stickyper,obeyall,locale=DE,dp=4]{siunitx}
\usetheme{Pittsburgh}
\setbeamercolor{normal text}{bg=red!7}
\setbeamertemplate{footline}{\insertpagenumber}
\usepackage{xmpmulti,amsmath,amssymb,graphicx,mflogo}
\DeclareGraphicsRule{*}{mps}{*}{}
\graphicspath{{./metapostpropagandafiles/}}
\newcommand{\myem}[1]{\texttt{#1}}
\title{Wide--range \MP\ tutorial}
\author{
  Luís Nobre Gonçalves \\
  (\href{mailto:lnobreg@gmail.com}{\underline{L. Nobre G.}})
}
\date{\today}
\begin{document}
```

-U:--- metapostpropaganda.tex Top L18 (LaTeX)----------

See code

latexmp

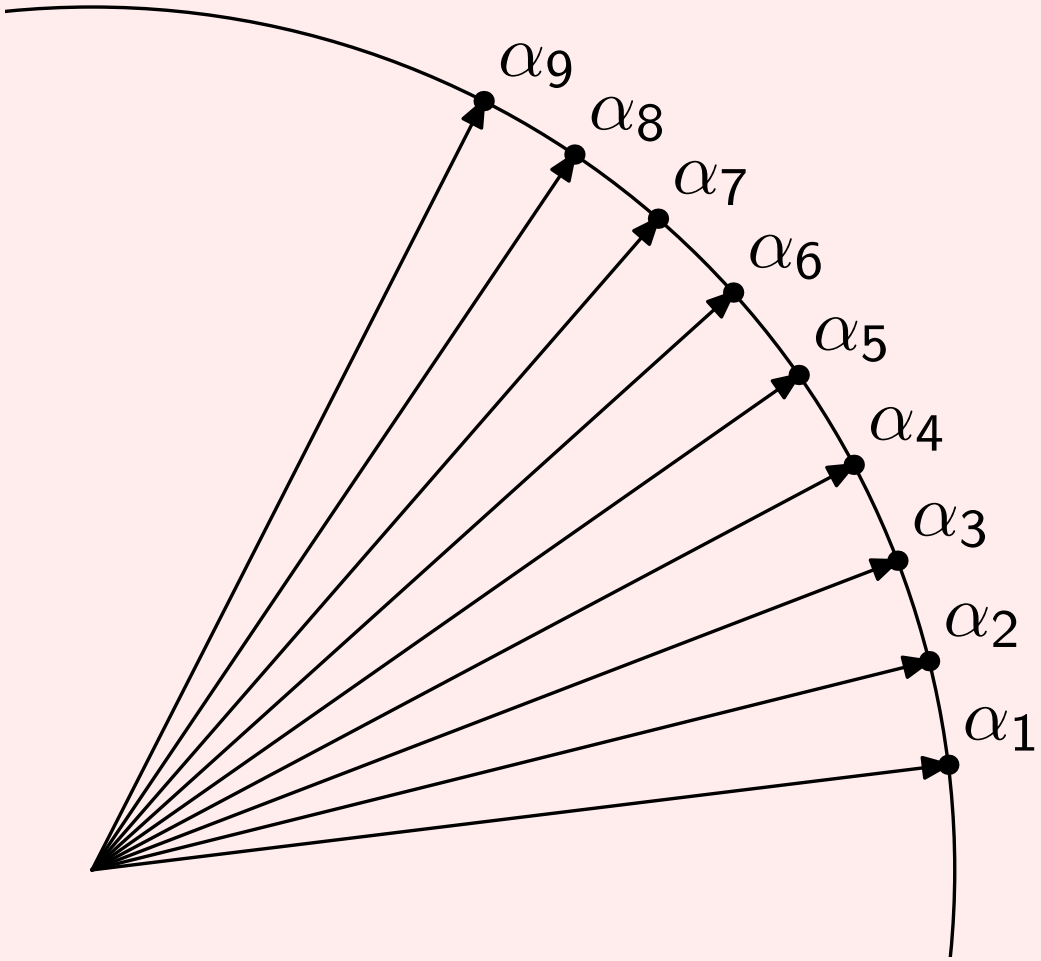

See code.

graphicx

```
\usepackage{graphicx}
\DeclareGraphicsRule{*}{mps}{*}{}
—
\includegraphics[height=61mm]{fekslatexmp.1}
```

beamer+xmpmulti

```
\usepackage{xmpmulti}
—
\multiinclude[<+>][graphics={width=8cm},end=10]
{feksmulti}
```

GNUPLOT

set term mp color solid latex
set output "feksgnuplot.mp"

xfig

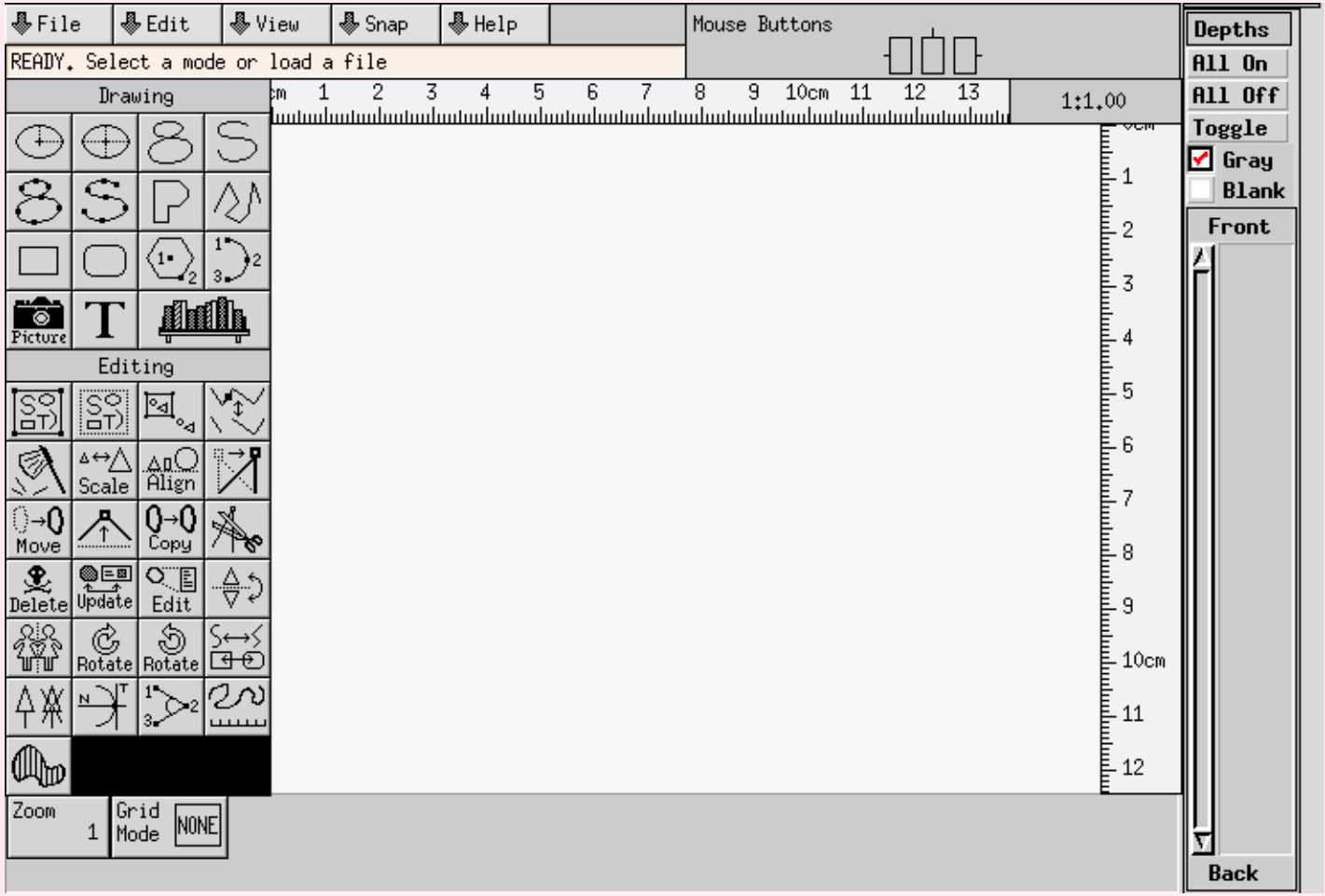
File
Edit
View
Snap
Help
Mouse Buttons
READY. Select a mode or load a file
Drawing
Picture
Editing
Scale
Align
Move
Copy
Delete
Update
Edit
Rotate
Rotate
Zoom
1
Grid Mode
NONE
1:1.00
Depths
All On
All Off
Toggle
Gray
Blank
Front
Back

fig2ps

dia

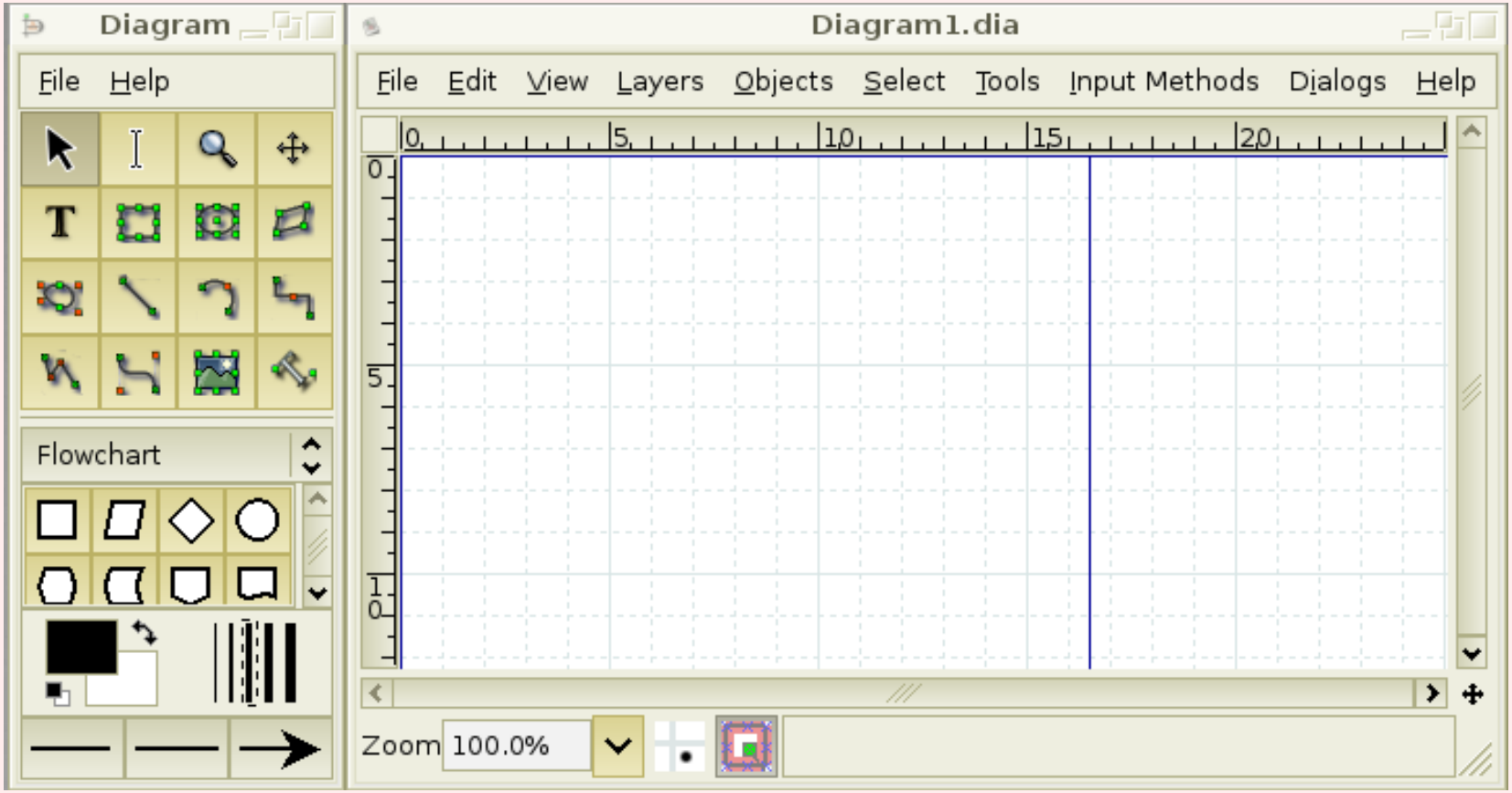
Diagram
File
Help
Flowchart
Diagram1.dia
File
Edit
View
Layers
Objects
Select
Tools
Input Methods
Dialogs
Help
Zoom
100.0%

epspdf+gs

```
epspdf minimal-1.mps
—
gs -q -sDEVICE=jpeggray -r100 -dNOPAUSE
-sOutputFile=minimal.jpg minimal-1.pdf < /dev/null
```

potrace+pstoedit+PstoeditMpostPreeditor

Example

PstoeditMpostPreeditor

Example

Basic workflow

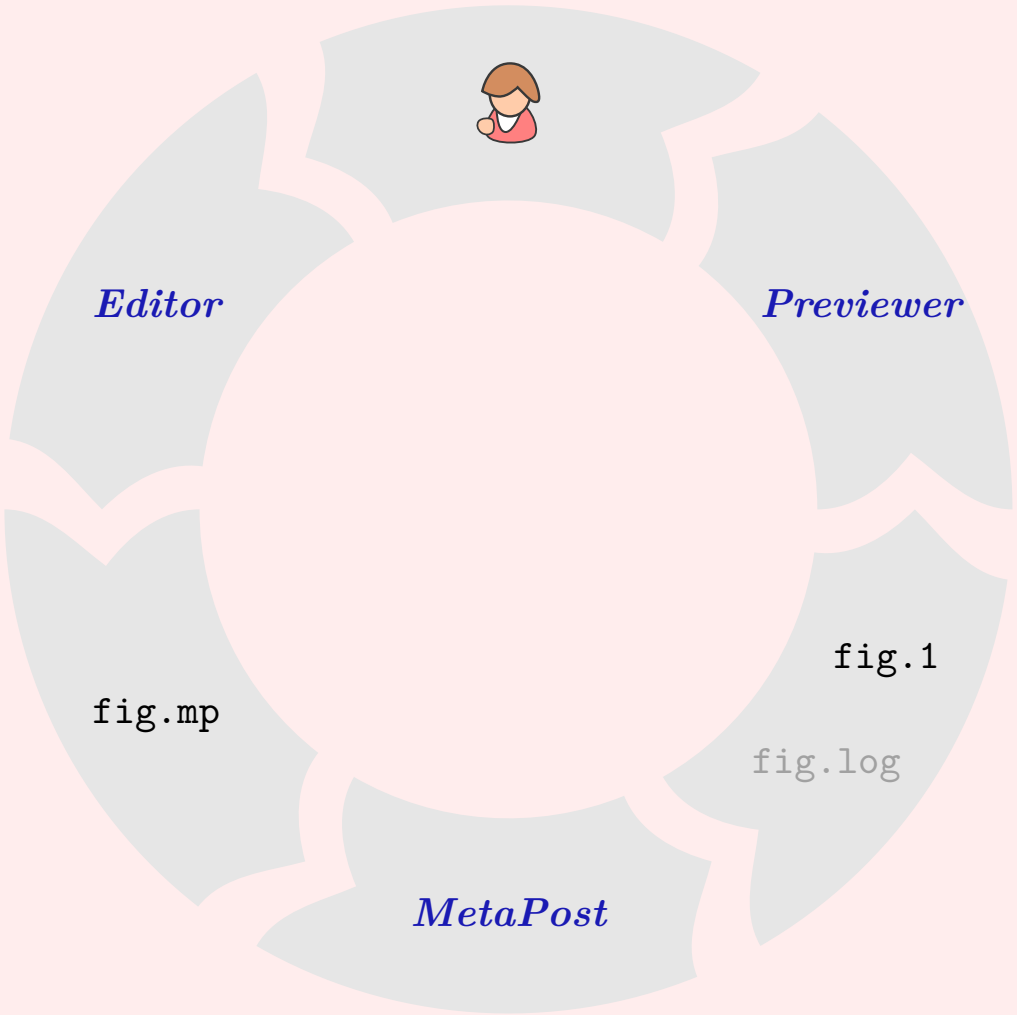

Workflow

1. Draw scheme by hand
2. Identify parameters

Workflow

1. Draw scheme by hand
2. Identify parameters
3. Express constraints
4. Determine valid ranges
5. Program
6. Test

Workflow example (0)

Workflow example (1)

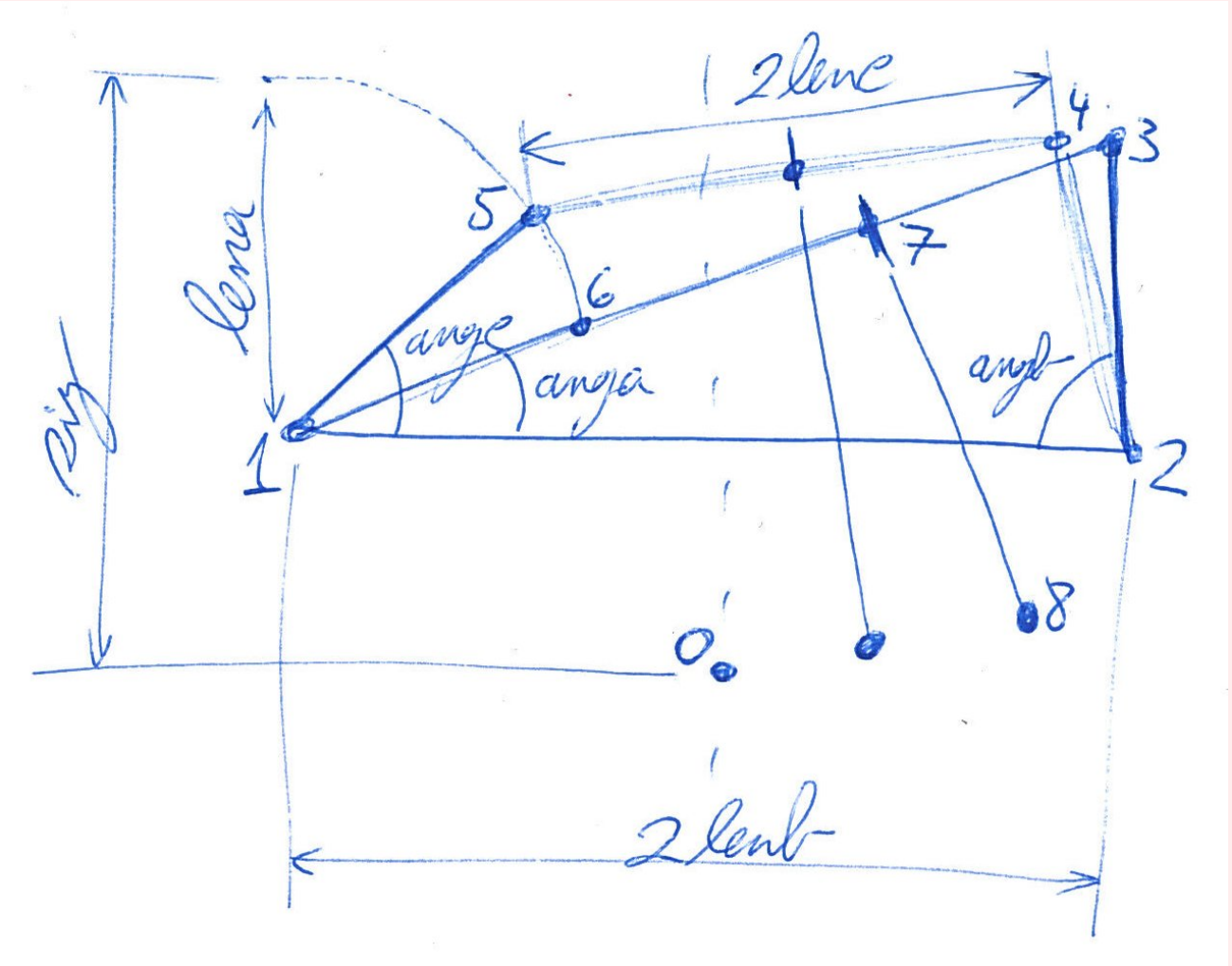

Workflow example (2)

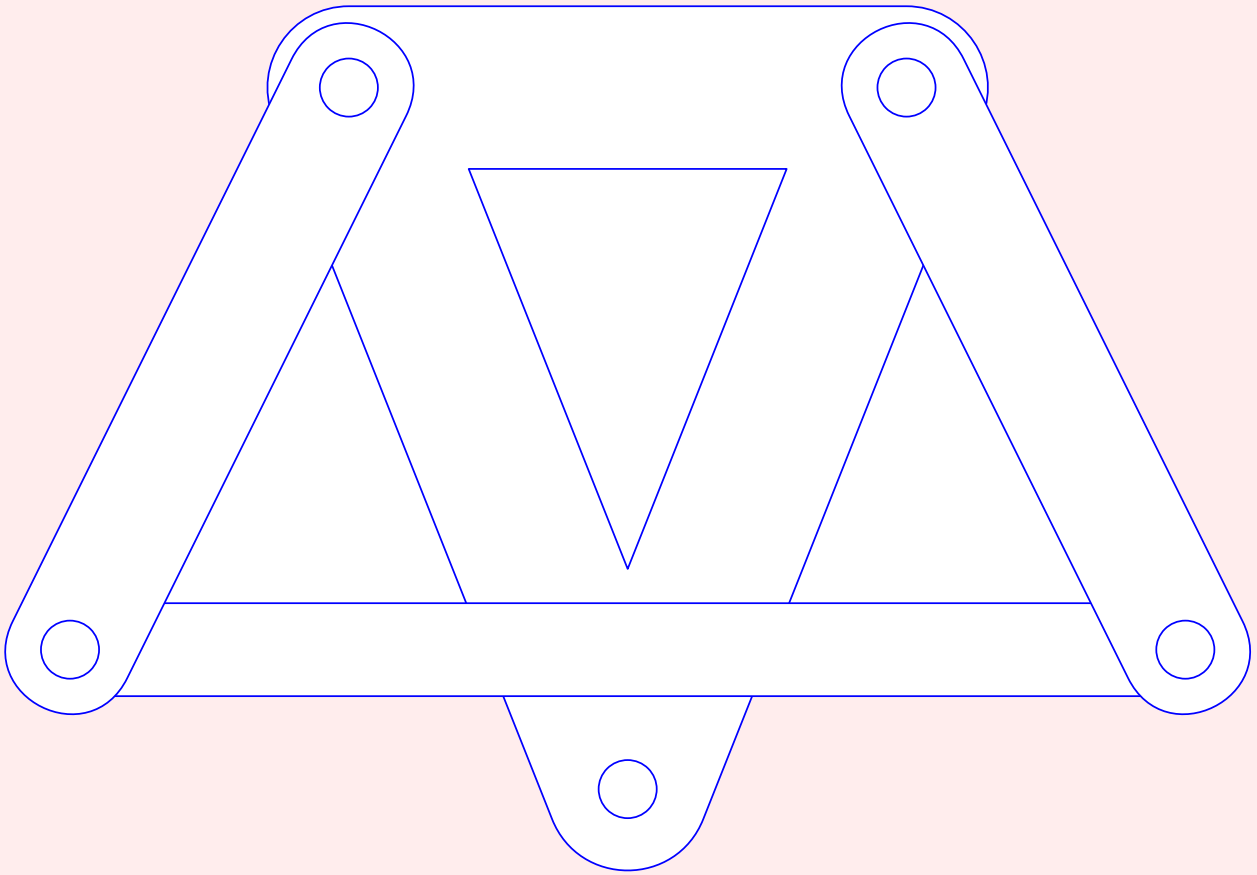

Workflow example (2)

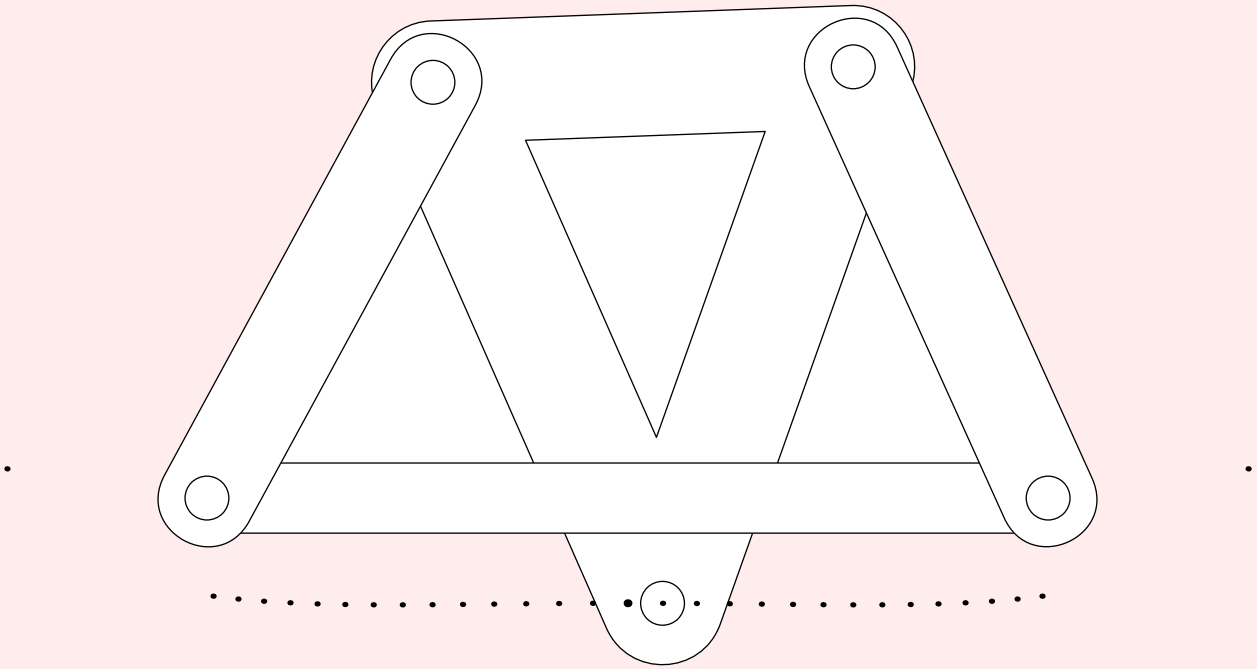

Workflow example (2)

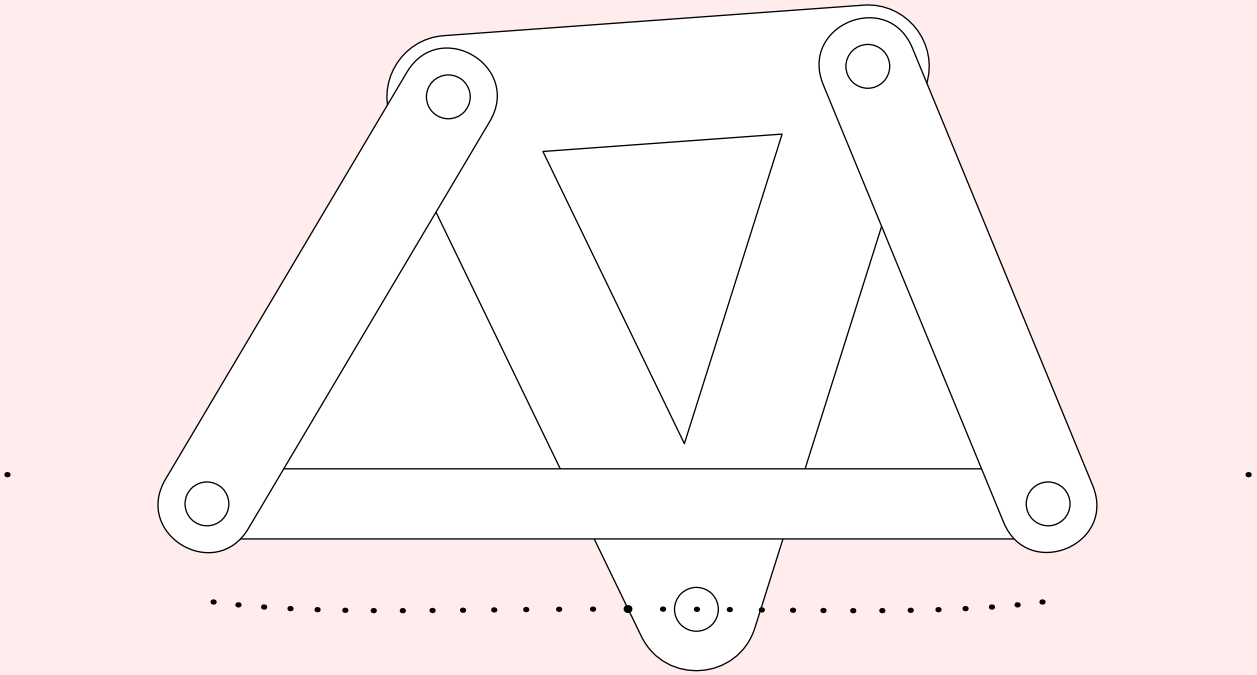

Workflow example (2)

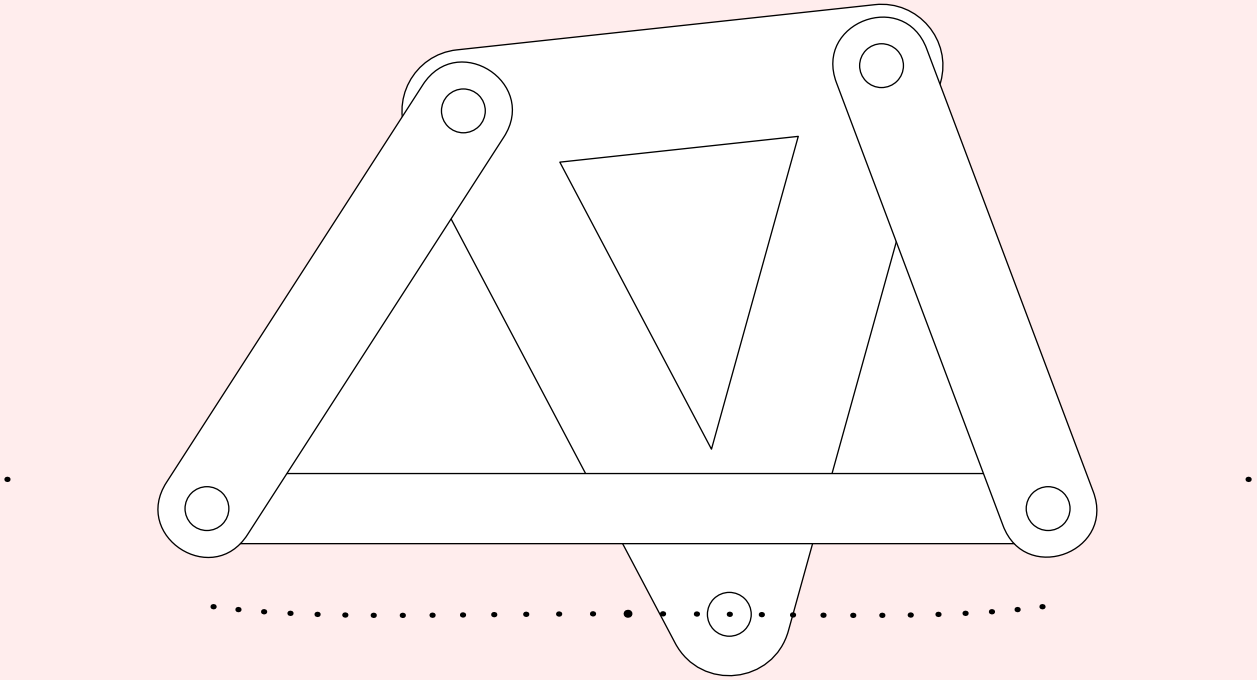

Workflow example (2)

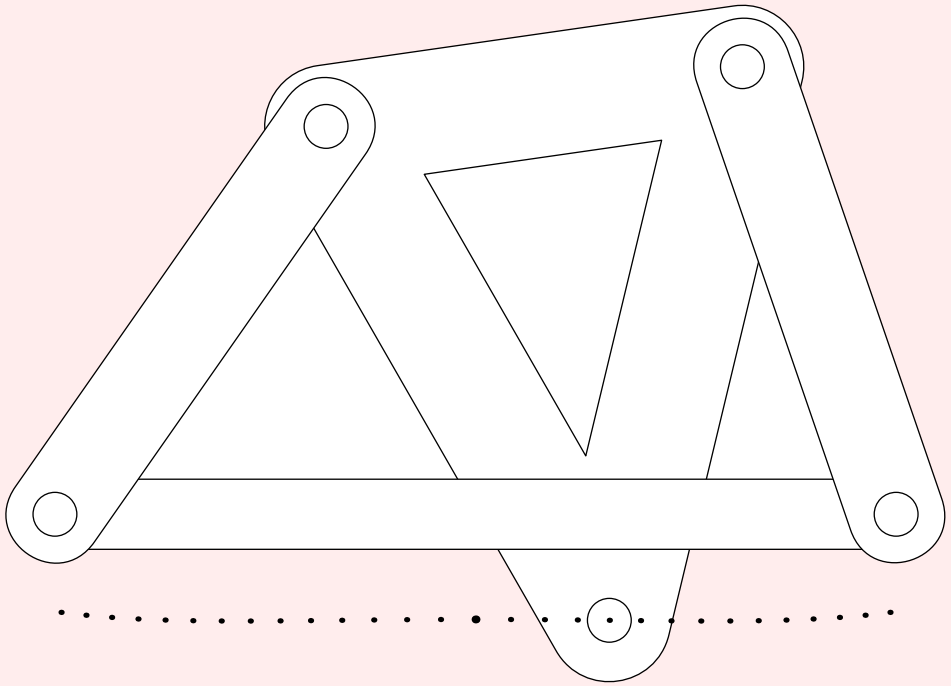

Workflow example (2)

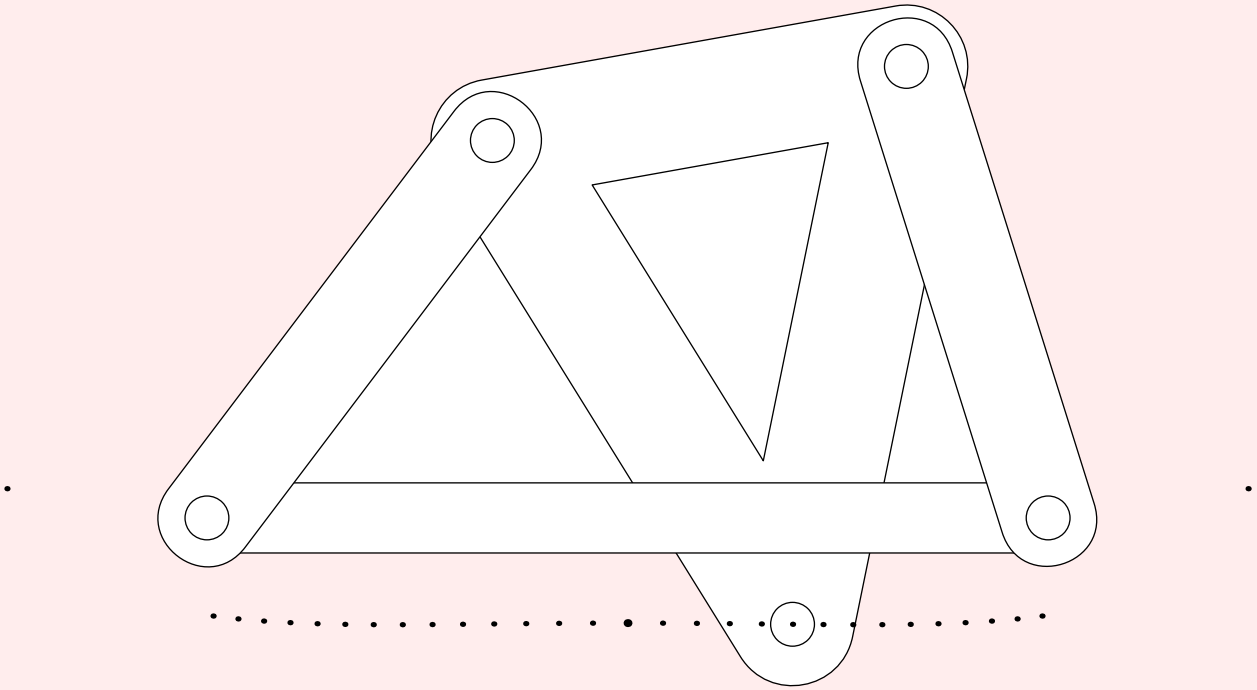

Workflow example (2)

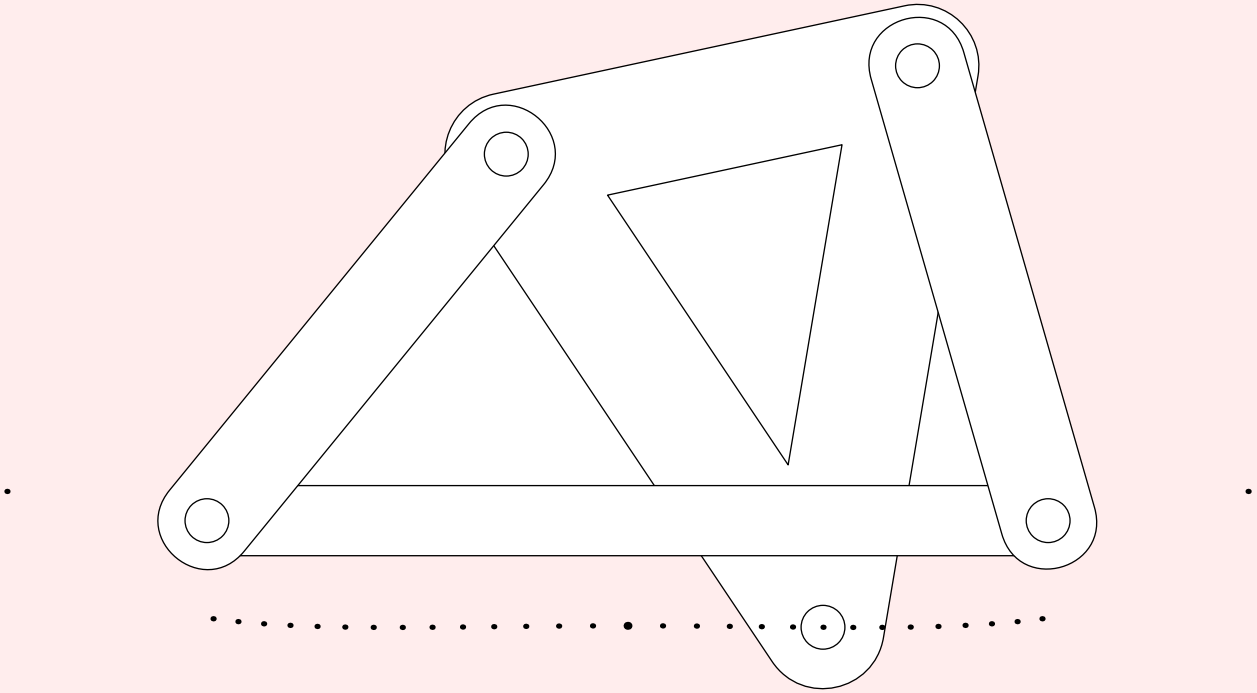

Workflow example (2)

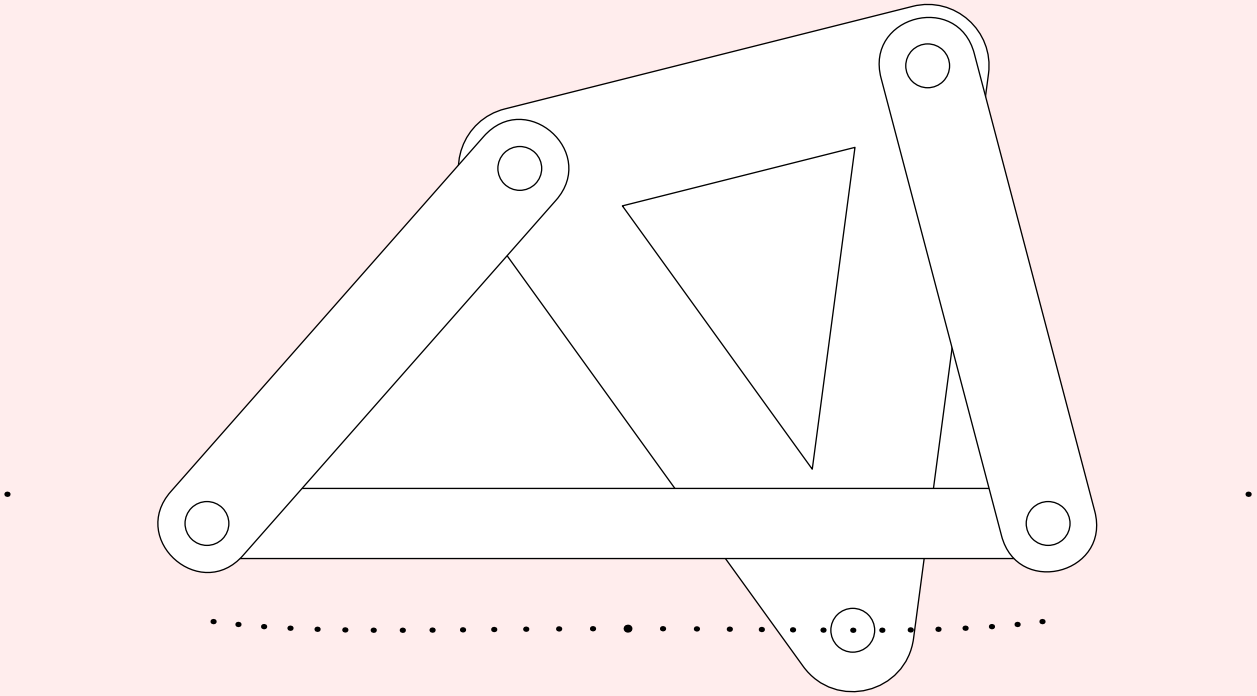

Workflow example (2)

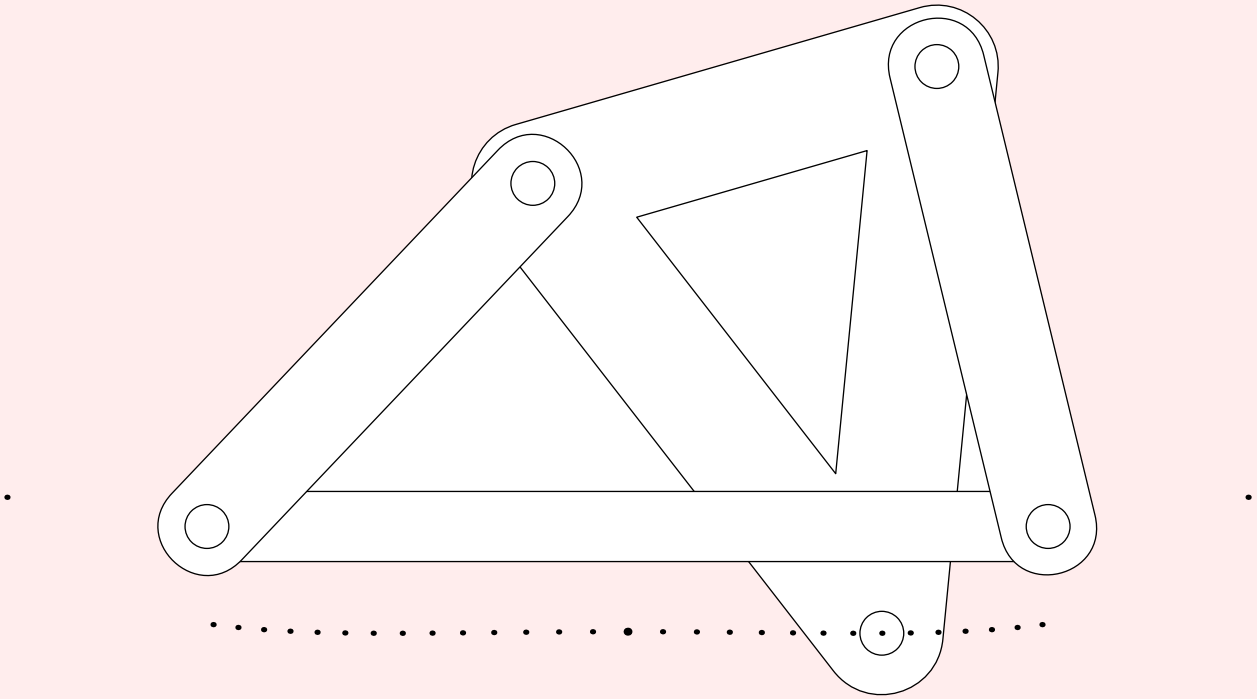

Workflow example (2)

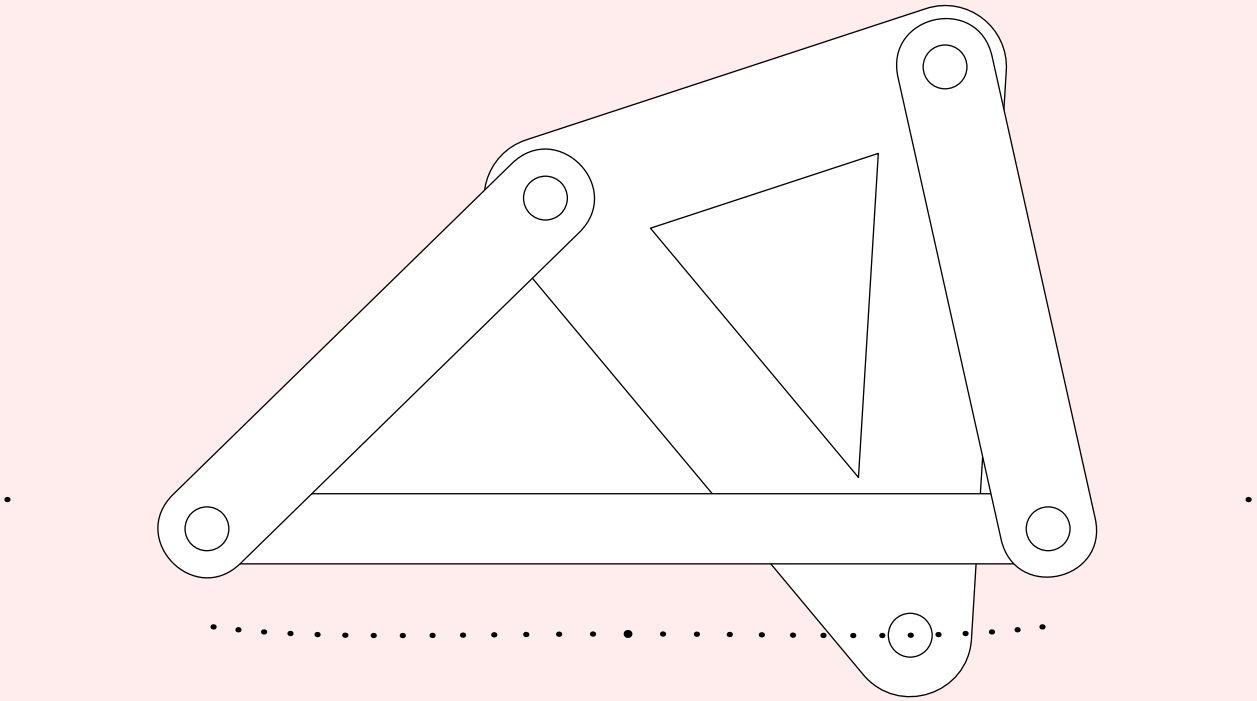

Workflow example (2)

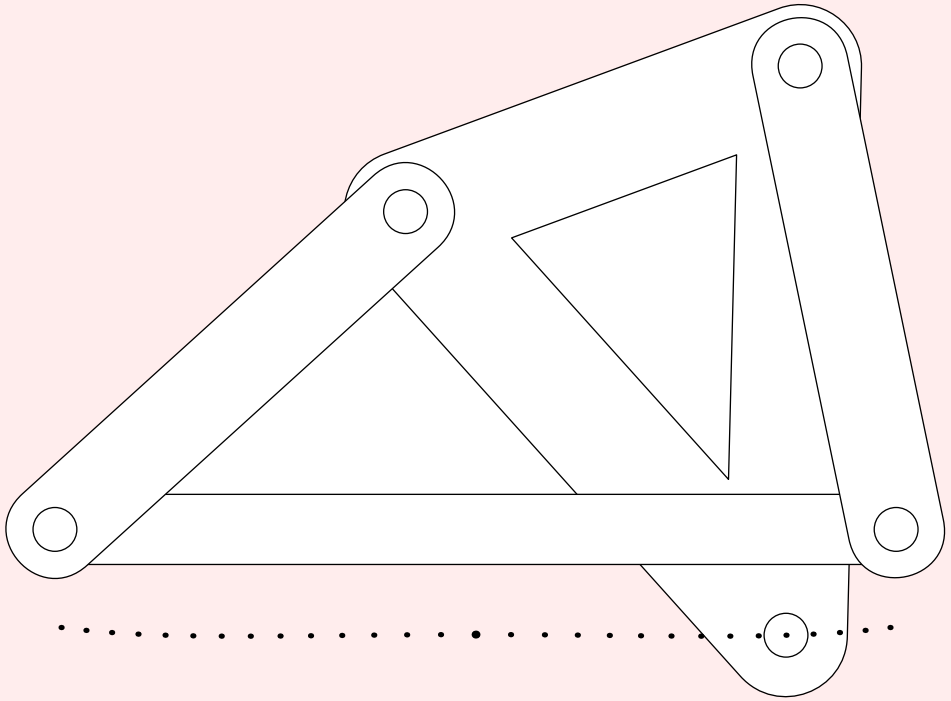

Workflow example (2)

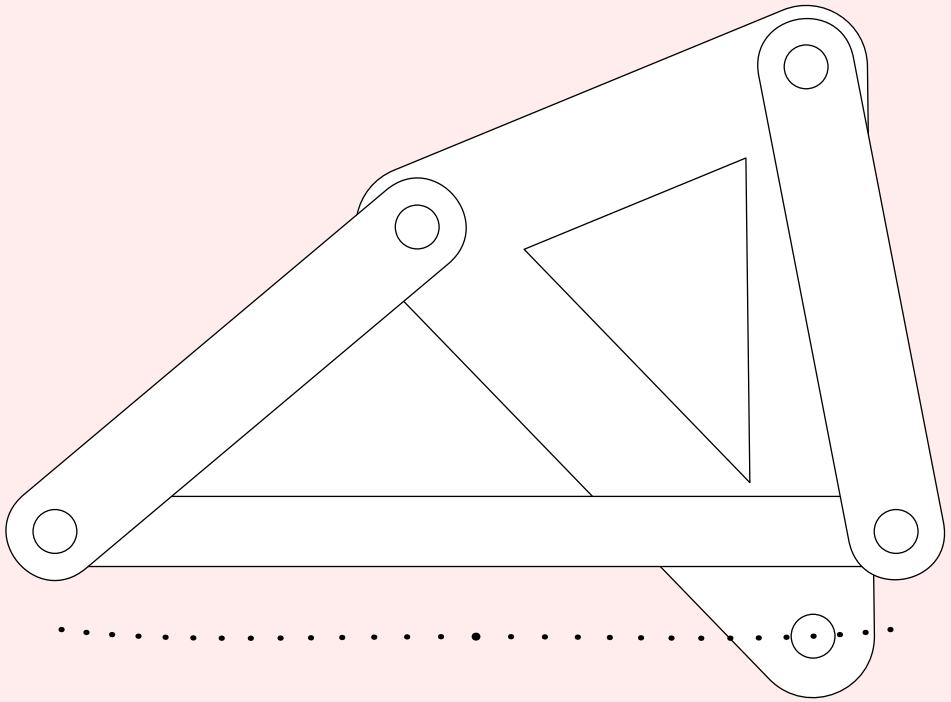

Workflow example (2)

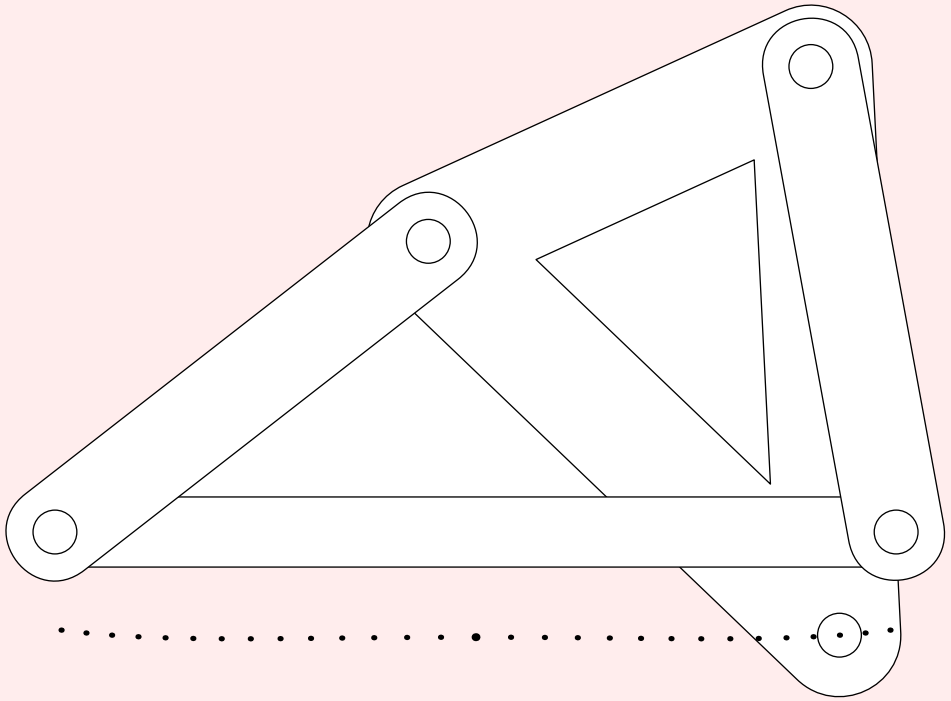

Workflow example (2)

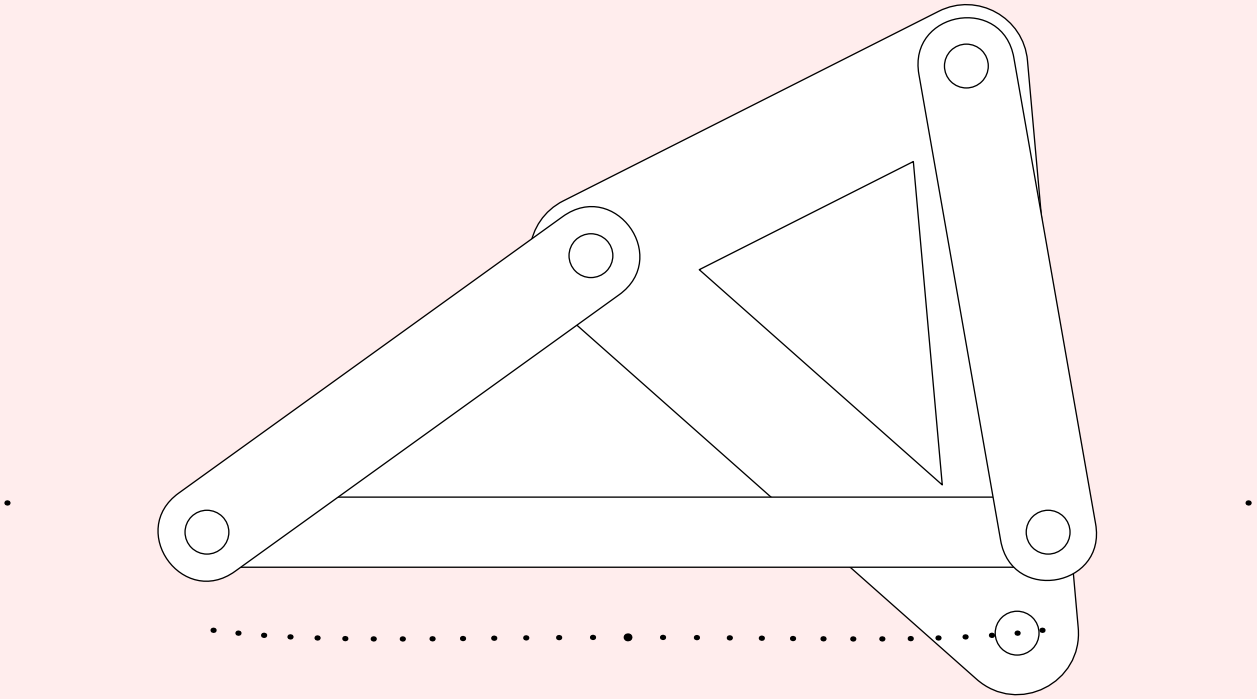

Workflow example (2)

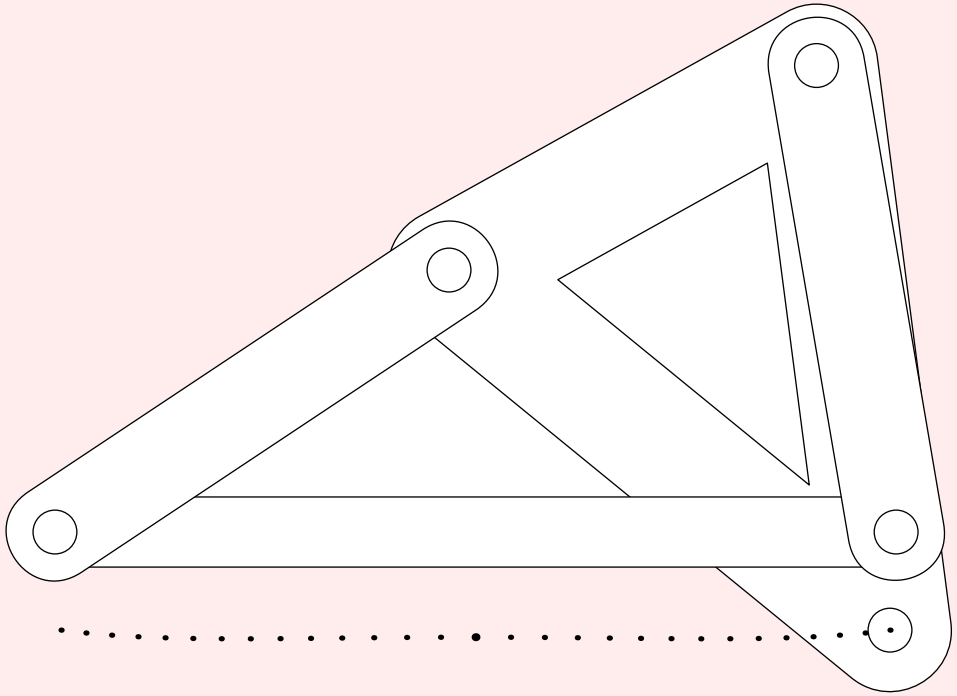

Workflow example (2)